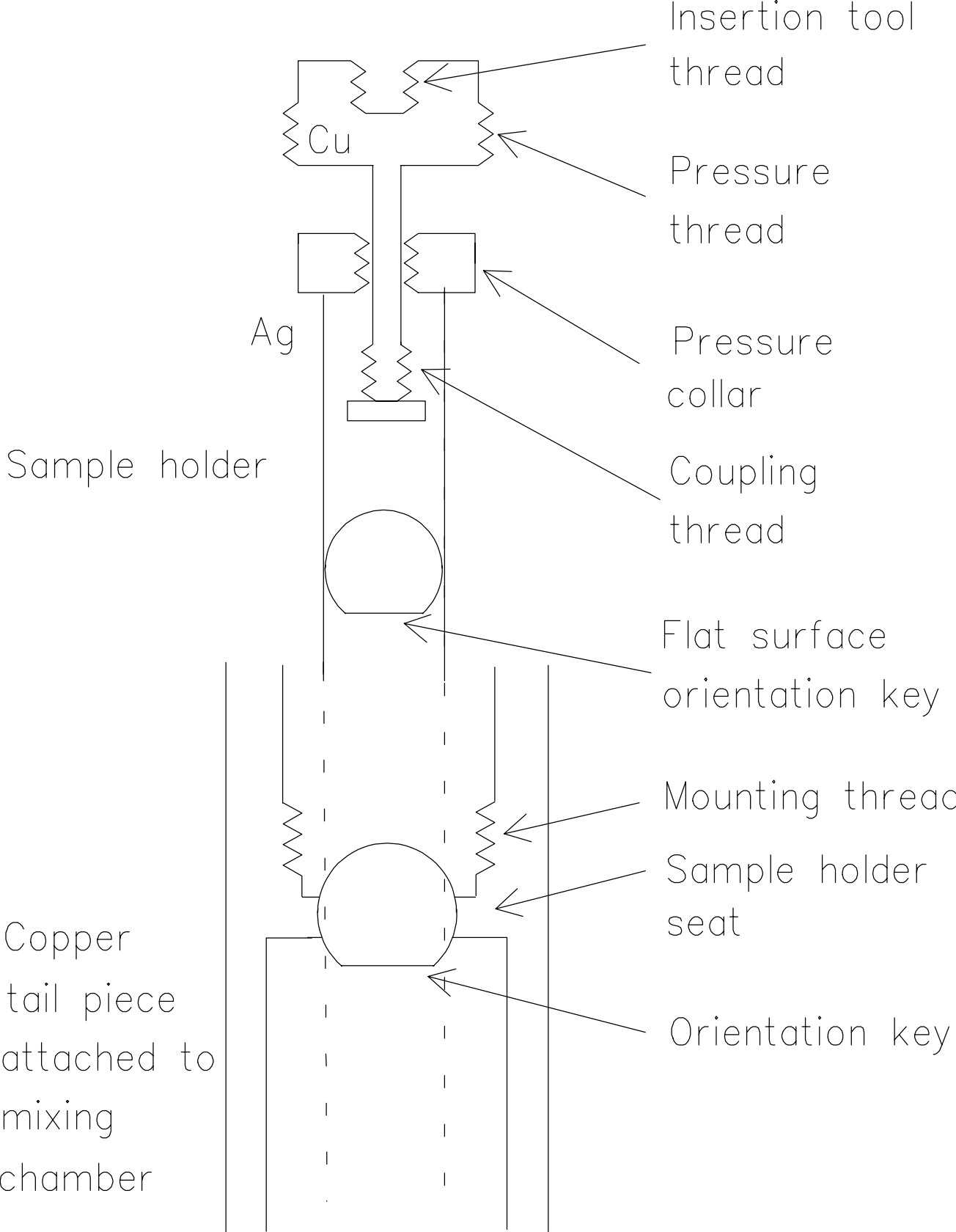
Insertion tool thread
Cu
Pressure thread
Ag
Pressure collar
Sample holder
Coupling thread
Flat surface orientation key
Mounting thread
Sample holder seat
Copper tail piece attached to mixing chamber
Orientation key